SAENG THAI RUBBER
บริษัท แสงไทยผลิตยาง จำกัด

SINGLE-SPHERE HIGH-PRESSURE RUBBER EXPANSION JOINT

WITH FLOATING FLANGE

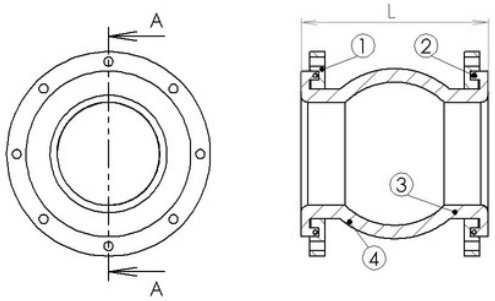

MATERIALS

ITEM NO.	DESCRIPTION	MATERIAL
1	Flange	Carbon Steel / Stainless Steel
2	Metal	Carbon Steel Wire
3	Elastomer	Synthetic Rubber (EPDM)
4	Reinforcing Fabric	High Tensile

TECHNICAL CONDITION

Model	STR	
Size I.D.	1.1/4" - 12"	14" - 48"
Working Pressure	20bar (300psi.)	10bar (150psi.)
Burst Pressure	53bar (775psi.)	23bar (342psi.)
Vacuum Rating	650 mm/Hg	
Temperatuer	-20°C to 100°C	

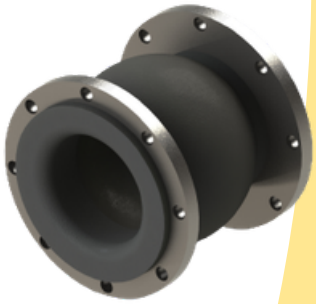

ALLOWABLE MOVEMENTS

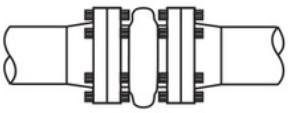
Axial Compression

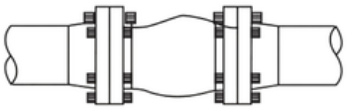
Axial Extension

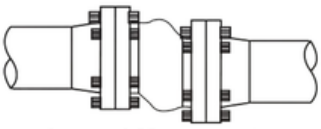
Lateral Movement

Angular Deflection

TABLE OF MAIN PARAMETERS OF NORMAL CORE DIAMETER, LENGTH, DISPLACEMENT VALUE

Normal core diameter DN		Length (L) (mm.)	Lateral (mm.)	Angular	Axial displacement	
(mm.)	(inch.)				Compression (mm.)	Extension (mm.)
32	1.1/4"	95	9	15°	9	6
40	1.1/2"	95	9	15°	10	6
50	2"	105	10	15°	10	7
65	2.1/2"	115	11	15°	13	7
80	3"	135	12	15°	15	8
100	4"	150	13	15°	19	10
125	5"	165	13	15°	19	12
150	6"	180	14	15°	20	12
200	8"	210	22	15°	20	16
250	10"	230	22	15°	25	16
300	12"	245	22	15°	25	16
350	14"	255	22	15°	25	16
400	16"	255	22	15°	25	16
450	18"	255	22	15°	25	16
500	20"	255	22	15°	25	16
600	24"	260	22	15°	25	16
700	28"	260	22	10°	25	16
800	32"	260	22	10°	25	16
900	36"	260	22	10°	25	16
1000	40"	260	22	10°	25	16
1200	48"	260	24	10°	26	18